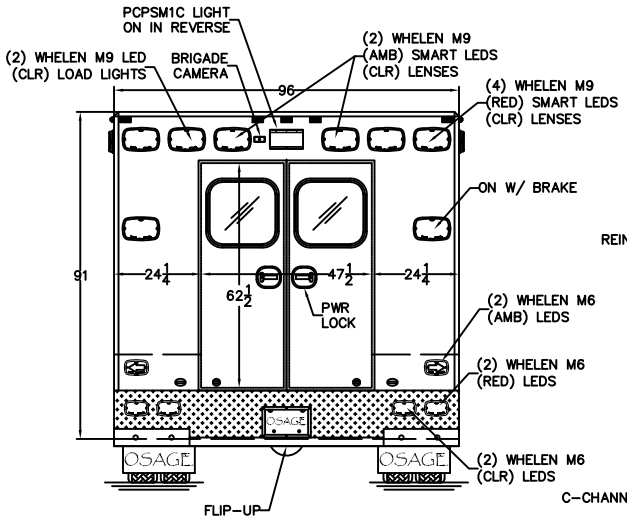

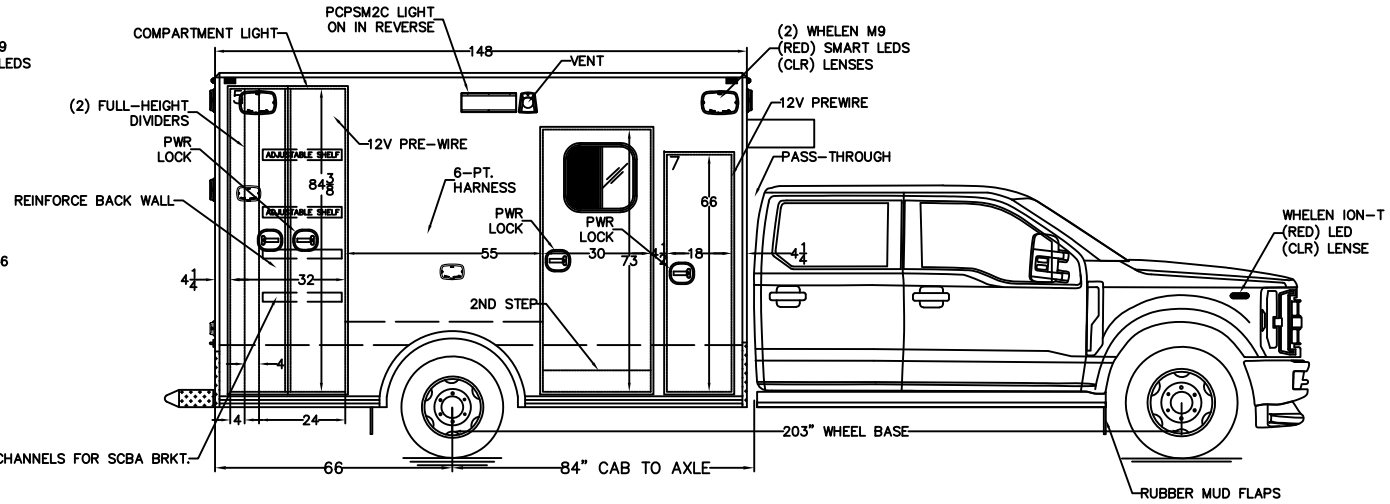

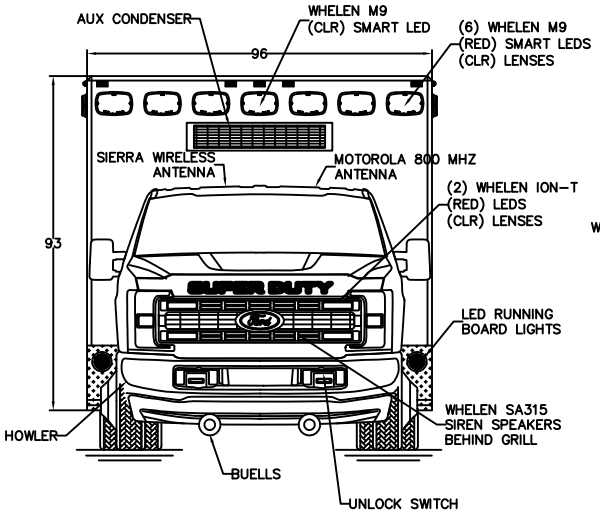

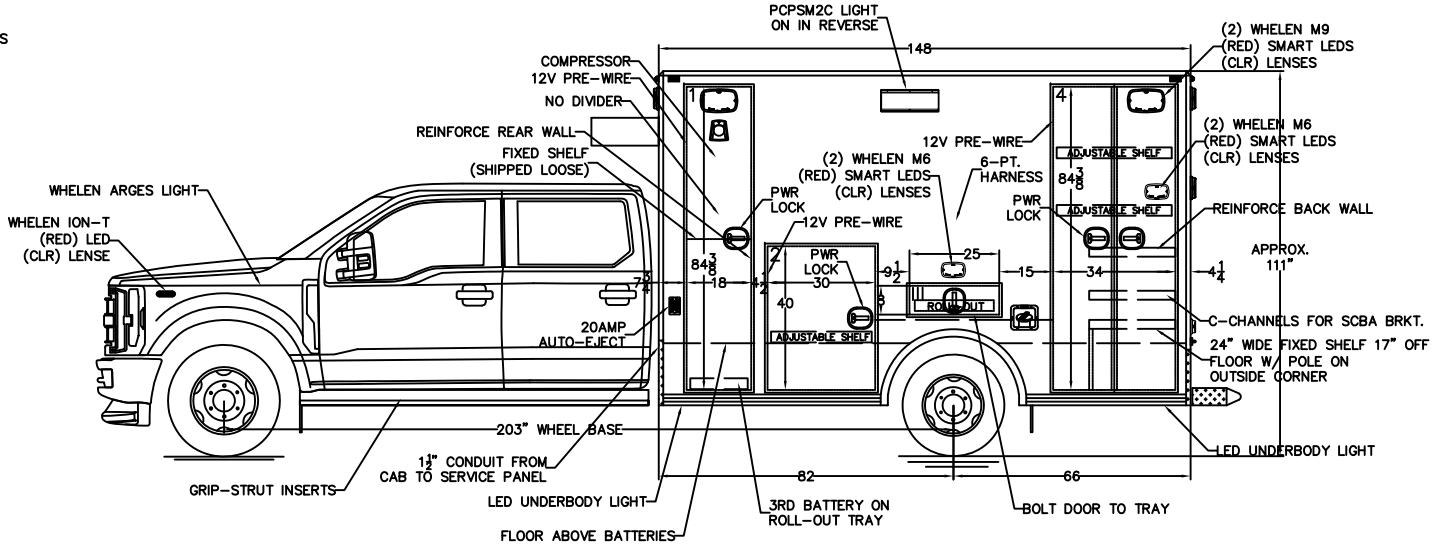

NOTES: THIS DRAWING IS NOT TO SCALE.
CHARACTERISTICS AND DIMENSIONS OF FINISHED PRODUCT MAY VARY.

NOTES:
1.) COMPARTMENT DIMENSIONS REFLECT OPENING CLEARANCE.
2.) APPROXIMATE COMPARTMENT DEPTH=20 1/2"DEEP.
3.) MODULE DIMENSIONS=148"L x 96"W x 93"H
4.) INTERIOR MODULE HEAD ROOM=72"H.
5.) ALL 9x7 LIGHTS TO BE WHELEN M9 SERIES LIGHTS, CHROME FLANGES.
6.) DOUBLE STAINLESS THRESHOLDS.
7.) DRY-DECK IN ALL COMPARTMENTS.
8.) SMOOTH ALUMINUM KICKPLATES.
9.) TECHNIQUE LED STRIP-LIGHTS IN ALL COMPARTMENTS.

Stock/Job#: J3804	Drawing# J3804-100	Cust. App'v/Date# .	Deal'r App'v/Date: .
Osage Dealer: TEN-8 FIRE	Osage Ambulances		
End Customer: CLEARWATER			

Rev.#	Revision Description	Date	Rev'd	App'vd
3				
2				
1	PRODUCTION DRAFT	05-20-25	SAH	.

NOTICE

This drawing and/or the information hereon is the exclusive property of Osage Ambulances and shall not be reproduced, used or disclosed without the authorized written consent of Osage Ambulances.

Drawn By: S.A.H.	Date: 05-20-25	Scale: NOT TO SCALE
Drawing Description: EXTERIOR LAYOUT TYPE-I WARRIOR, CREW CAB		Revision# 1

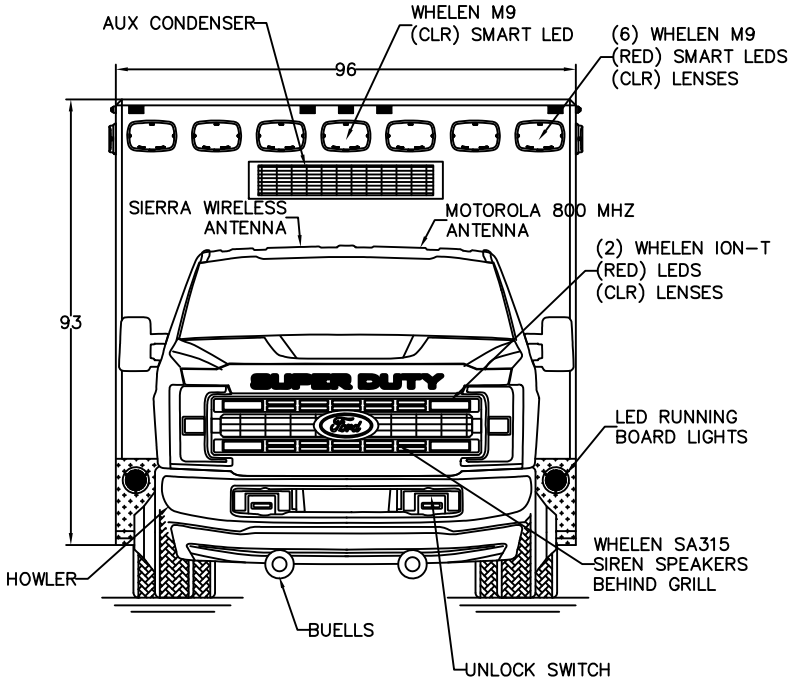

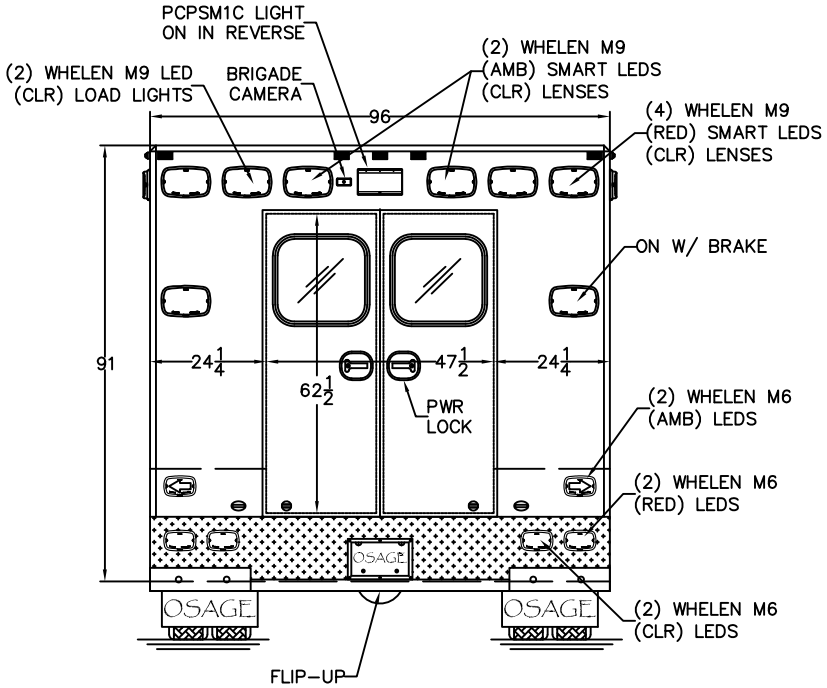

NOTES: THIS DRAWING IS NOT TO SCALE.
CHARACTERISTICS AND DIMENSIONS OF FINISHED PRODUCT MAY VARY.

NOTES:
1.) COMPARTMENT DIMENSIONS REFLECT OPENING CLEARANCE.
2.) APPROXIMATE COMPARTMENT DEPTH=20 1/2"DEEP.
3.) MODULE DIMENSIONS=148"L x 96"W x 93"H
4.) INTERIOR MODULE HEAD ROOM=72"H.
5.) ALL 9x7 LIGHTS TO BE WHELEN M9 SERIES LIGHTS, CHROME FLANGES.
6.) DOUBLE STAINLESS THRESHOLDS.
7.) DRY-DECK IN ALL COMPARTMENTS.
8.) SMOOTH ALUMINUM KICKPLATES.
9.) TECHNIQUE LED STRIP-LIGHTS IN ALL COMPARTMENTS.

Stock/Job#: J3804	Drawing# J3804-100A	Cust. App'v/Date# .	Deal'r App'v/Date: .
Osage Dealer: TEN-8 FIRE	Osage Ambulances		
End Customer: CLEARWATER			

Rev.#	Revision Description	Date	Rev'd	App'vd
3				
2				
1	PRODUCTION DRAFT	05-20-25	SAH	.

NOTICE

This drawing and/or the information hereon is the exclusive property of Osage Ambulances and shall not be reproduced, used or disclosed without the authorized written consent of Osage Ambulances.

Drawn By: S.A.H.	Date: 05-20-25	Scale: NOT TO SCALE
Drawing Description: EXTERIOR LAYOUT, FRONT/REAR TYPE-I WARRIOR, CREW CAB		Revision# 1

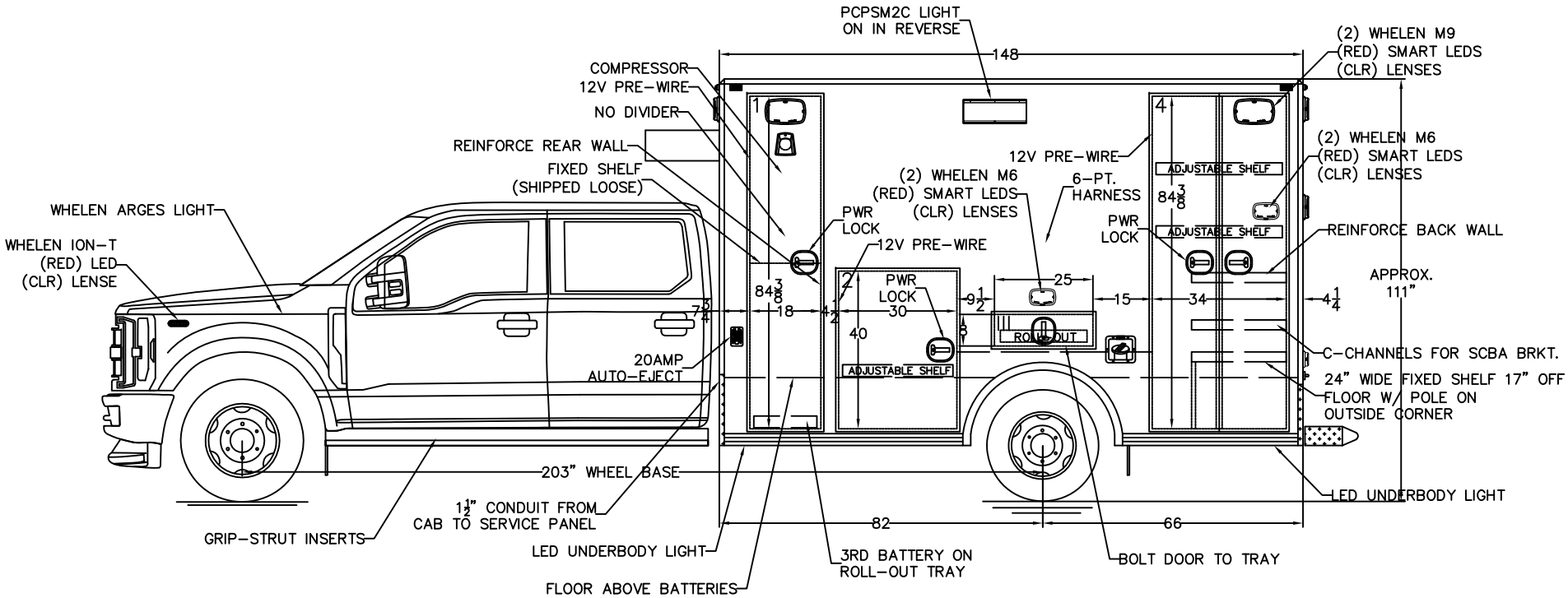

NOTES: THIS DRAWING IS NOT TO SCALE.
CHARACTERISTICS AND DIMENSIONS OF FINISHED PRODUCT MAY VARY.

NOTES:
1.) COMPARTMENT DIMENSIONS REFLECT OPENING CLEARANCE.
2.) APPROXIMATE COMPARTMENT DEPTH=20 1/2"DEEP.
3.) MODULE DIMENSIONS=148"L x 96"W x 93"H
4.) INTERIOR MODULE HEAD ROOM=72"H.
5.) ALL 9x7 LIGHTS TO BE WHELEN M9 SERIES LIGHTS, CHROME FLANGES.
6.) DOUBLE STAINLESS THRESHOLDS.
7.) DRY-DECK IN ALL COMPARTMENTS.
8.) SMOOTH ALUMINUM KICKPLATES.
9.) TECHNIQUE LED STRIP-LIGHTS IN ALL COMPARTMENTS.

Stock/Job#: J3804	Drawing# J3804-100B	Cust. App'v/Date# .	Deal'r App'v/Date: .
Osage Dealer: TEN-8 FIRE	Osage Ambulances		
End Customer: CLEARWATER			

Rev.#	Revision Description	Date	Rev'd	App'vd
3				
2				
1	PRODUCTION DRAFT	05-20-25	SAH	.

NOTICE

This drawing and/or the information hereon is the exclusive property of Osage Ambulances and shall not be reproduced, used or disclosed without the authorized written consent of Osage Ambulances.

Drawn By: S.A.H.	Date: 05-20-25	Scale: NOT TO SCALE
Drawing Description: EXTERIOR LAYOUT, STREETSIDE TYPE-I WARRIOR, CREW CAB		Revision# 1

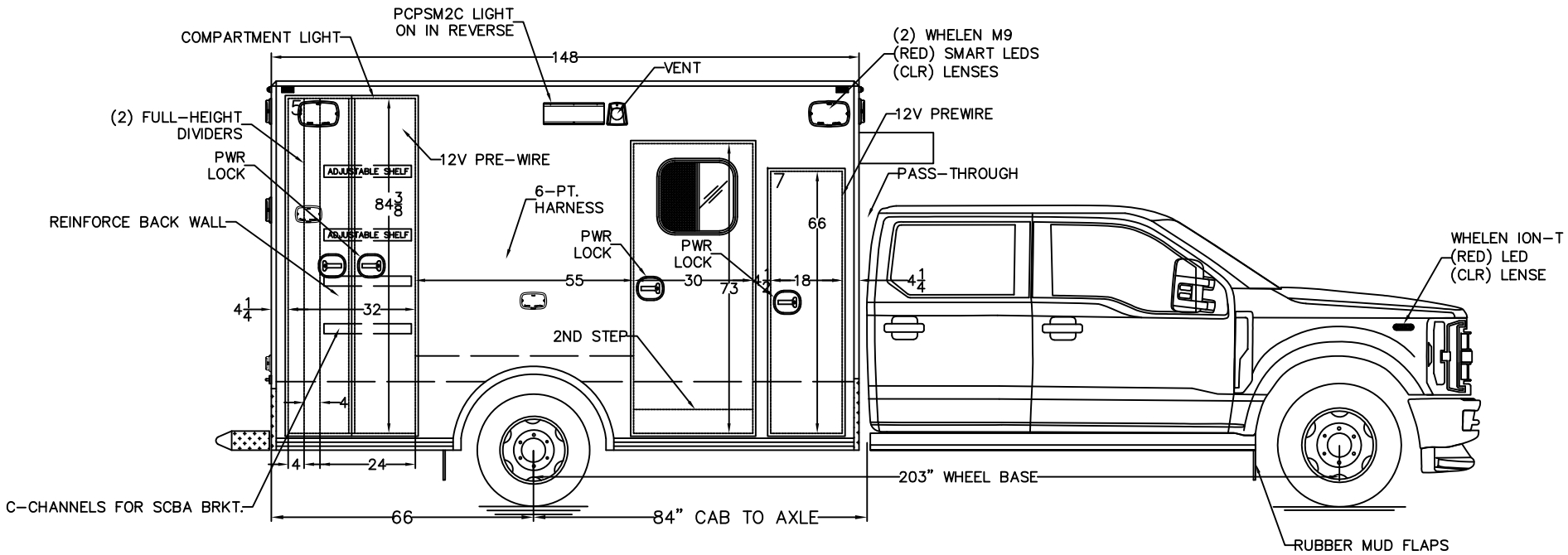

NOTES: THIS DRAWING IS NOT TO SCALE.
CHARACTERISTICS AND DIMENSIONS OF FINISHED PRODUCT MAY VARY.

NOTES:
1.) COMPARTMENT DIMENSIONS REFLECT OPENING CLEARANCE.
2.) APPROXIMATE COMPARTMENT DEPTH=20 1/2"DEEP.
3.) MODULE DIMENSIONS=148"L x 96"W x 93"H
4.) INTERIOR MODULE HEAD ROOM=72"H.
5.) ALL 9x7 LIGHTS TO BE WHELEN M9 SERIES LIGHTS, CHROME FLANGES.
6.) DOUBLE STAINLESS THRESHOLDS.
7.) DRY-DECK IN ALL COMPARTMENTS.
8.) SMOOTH ALUMINUM KICKPLATES.
9.) TECHNIQUE LED STRIP-LIGHTS IN ALL COMPARTMENTS.

Stock/Job#: J3804	Drawing# J3804-100C	Cust. App'v/Date# .	Deal'r App'v/Date: .
Osage Dealer: TEN-8 FIRE	Osage Ambulances		
End Customer: CLEARWATER			
NOTICE	Drawn By: S.A.H.	Date: 05-20-25	Scale: NOT TO SCALE
This drawing and/or the information hereon is the exclusive property of Osage Ambulances and shall not be reproduced, used or disclosed without the authorized written consent of Osage Ambulances.	Drawing Description: EXTERIOR LAYOUT, CURBSIDE TYPE-I WARRIOR, CREW CAB		Revision# 1

Rev.#	Revision Description	Date	Rev'd	App'vd
3				
2				
1	PRODUCTION DRAFT	05-20-25	SAH	.

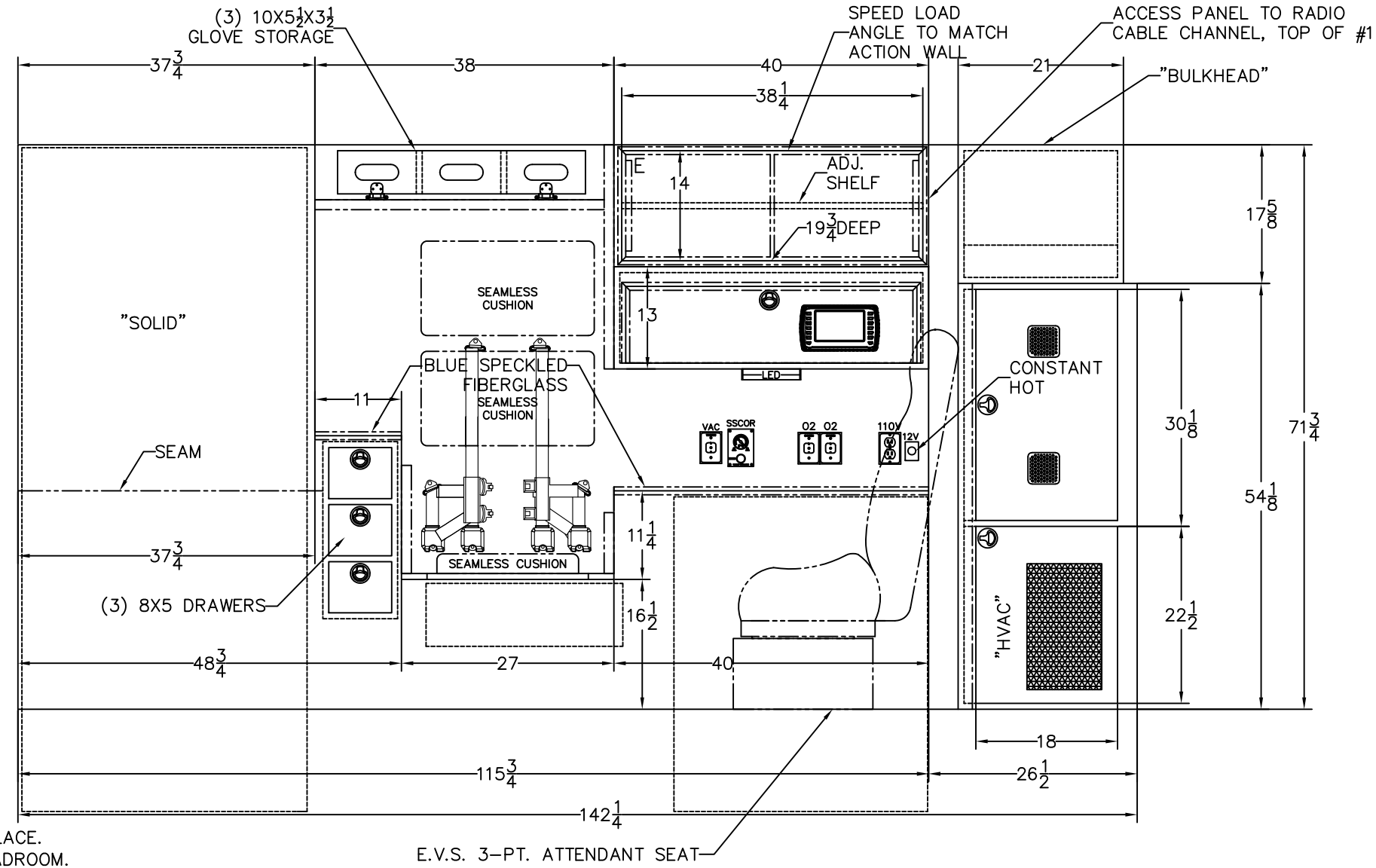

NOTES:
1.) GRAY GLACE.
2.) 72" HEADROOM.
3.) S.S. SOUTHCOS.

NOTES: THIS DRAWING IS NOT TO SCALE.
CHARACTERISTICS AND DIMENSIONS OF FINISHED PRODUCT MAY VARY.

NOTES: CABINET DEPTHS REPRESENT DIMENSION FROM INSIDE REAR TO FRONT FACE OF CABINETS, WITHOUT TRIM. ACTUAL WORKING DEPTH WILL BE LESS THAN DIMENSION SHOWN UNLESS OTHERWISE SPECIFIED.

Stock/Job#: J3804	Drawing# J3804-101	Cust. App'v/Date# .	Deal'r App'v/Date: .
Osage Dealer: TEN-8 FIRE	Osage Ambulances		
End Customer: CLEARWATER			
NOTICE	Drawn By: S.A.H.	Date: 05-20-25	Scale: NOT TO SCALE
This drawing and/or the information hereon is the exclusive property of Osage Ambulances and shall not be reproduced, used or disclosed without the authorized written consent of Osage Ambulances.	Drawing Description: STREETSIDE INTERIOR TYPE-I WARRIOR, CREW CAB		Revision# 1

Rev.#	Revision Description	Date	Rev'd	App'vd
3				
2				
1	PRODUCTION DRAFT	05-20-25	SAH	.

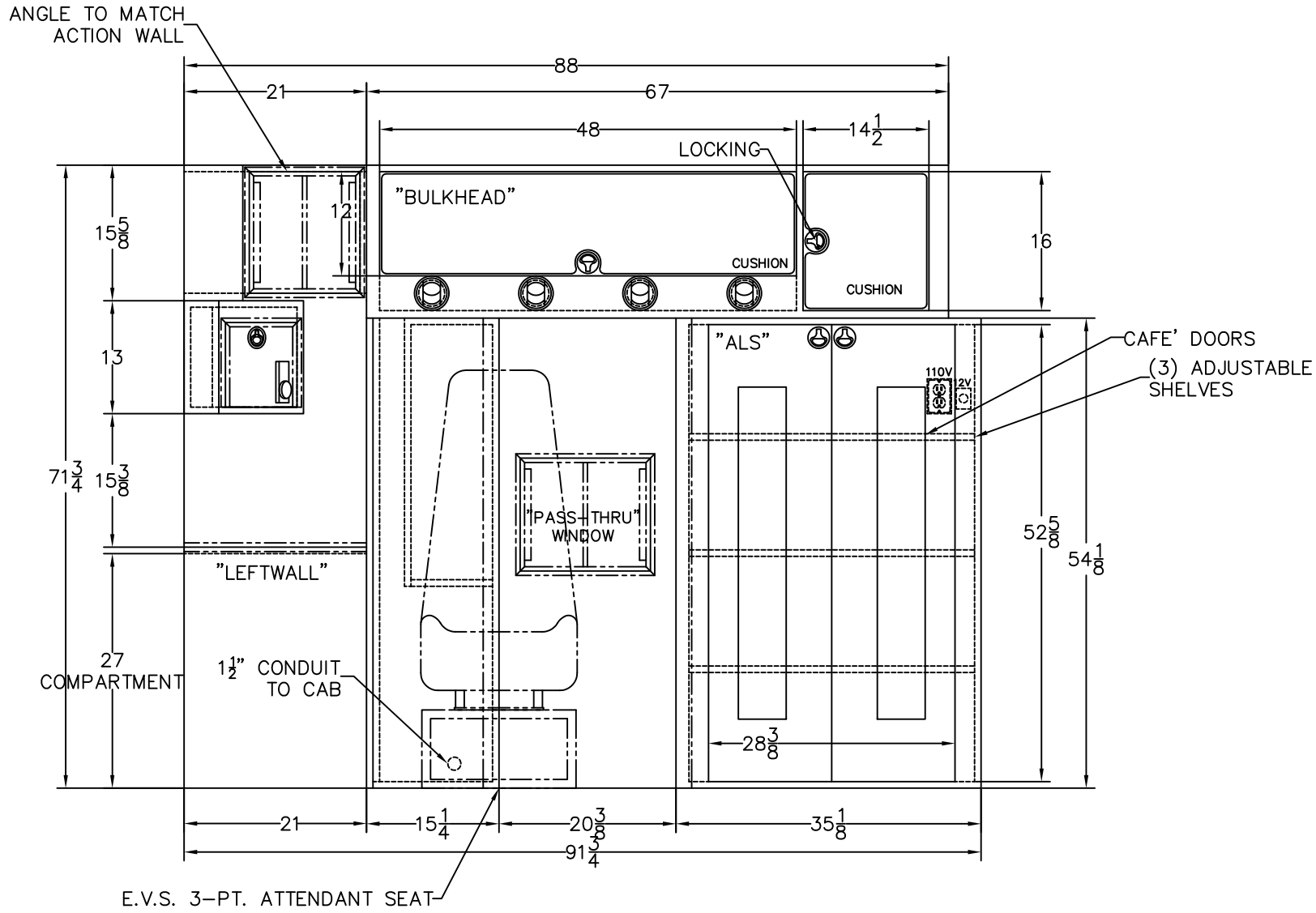

NOTES: THIS DRAWING IS NOT TO SCALE.
CHARACTERISTICS AND DIMENSIONS OF FINISHED PRODUCT MAY VARY.

NOTES: CABINET DEPTHS REPRESENT DIMENSION FROM INSIDE REAR TO FRONT FACE OF CABINETS, WITHOUT TRIM. ACTUAL WORKING DEPTH WILL BE LESS THAN DIMENSION SHOWN UNLESS OTHERWISE SPECIFIED.

Stock/Job#: J3804	Drawing# J3804-102	Cust. App'v/Date# .	Deal'r App'v/Date: .
Osage Dealer: TEN-8 FIRE	Osage Ambulances		
End Customer: CLEARWATER			
NOTICE	Drawn By: S.A.H.	Date: 05-20-25	Scale: NOT TO SCALE
This drawing and/or the information hereon is the exclusive property of Osage Ambulances and shall not be reproduced, used or disclosed without the authorized written consent of Osage Ambulances.	Drawing Description: FORWARD INTERIOR TYPE-I WARRIOR, CREW CAB		Revision# 1

Rev.#	Revision Description	Date	Rev'd	App'vd
3				
2				
1	PRODUCTION DRAFT	05-20-25	SAH	.

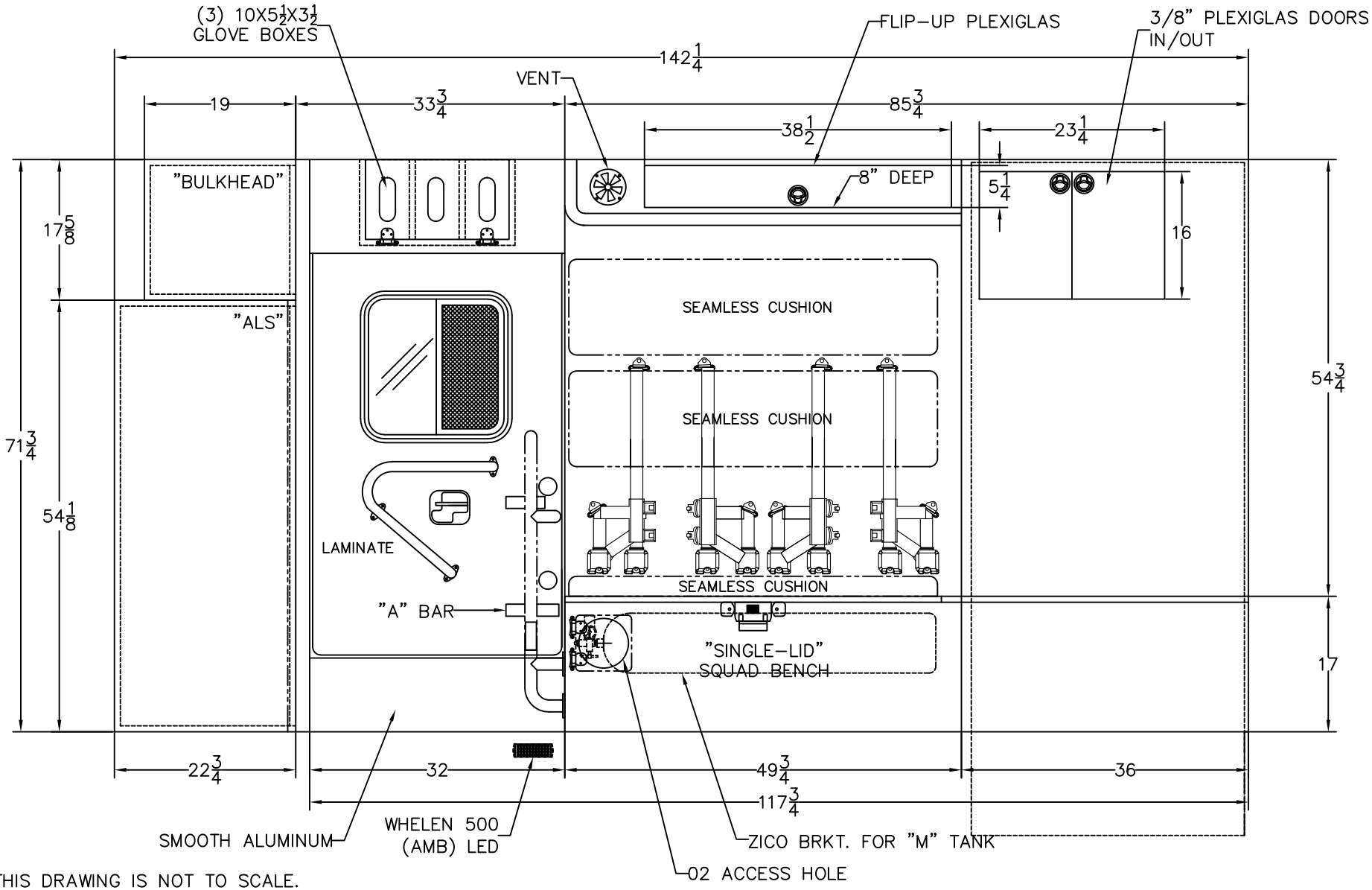

NOTES: THIS DRAWING IS NOT TO SCALE.
CHARACTERISTICS AND DIMENSIONS OF FINISHED PRODUCT MAY VARY.

NOTES: CABINET DEPTHS REPRESENT DIMENSION FROM INSIDE REAR TO FRONT FACE OF CABINETS, WITHOUT TRIM. ACTUAL WORKING DEPTH WILL BE LESS THAN DIMENSION SHOWN UNLESS OTHERWISE SPECIFIED.

Stock/Job#: J3804	Drawing# J3804-103	Cust. App'v/Date# .	Deal'r App'v/Date: .	
Osage Dealer: TEN-8 FIRE	Osage Ambulances			
End Customer: CLEARWATER				
NOTICE	Drawn By: S.A.H.	Date: 05-20-25	Scale: NOT TO SCALE	
This drawing and/or the information hereon is the exclusive property of Osage Ambulances and shall not be reproduced, used or disclosed without the authorized written consent of Osage Ambulances.	Drawing Description: CURBSIDE INTERIOR TYPE-I WARRIOR, CREW CAB			Revision# 1

Rev.#	Revision Description	Date	Rev'd	App'vd
3				
2				
1	PRODUCTION DRAFT	05-20-25	SAH	.

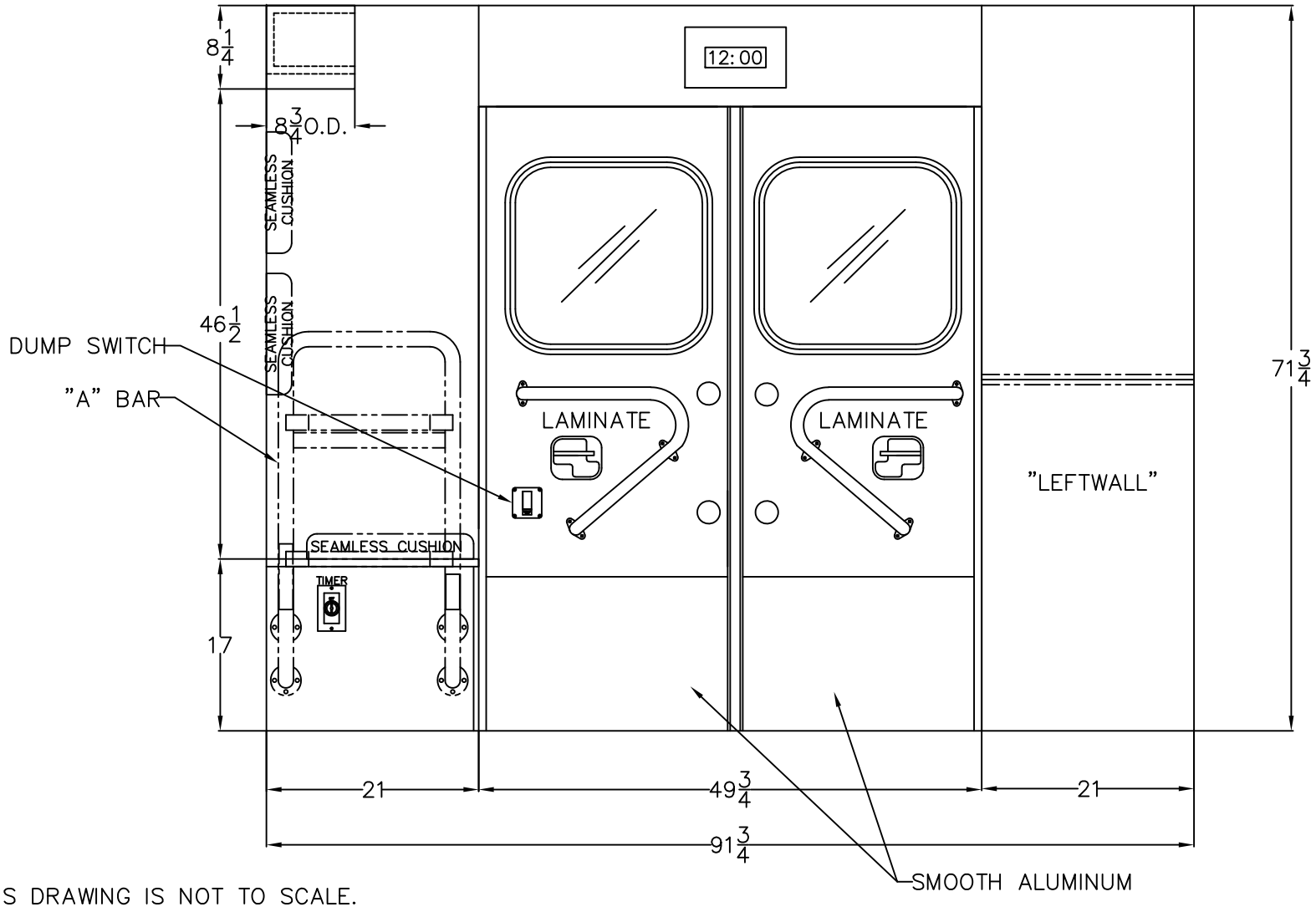

NOTES: THIS DRAWING IS NOT TO SCALE.
CHARACTERISTICS AND DIMENSIONS OF FINISHED PRODUCT MAY VARY.

NOTES: CABINET DEPTHS REPRESENT DIMENSION FROM INSIDE REAR TO FRONT FACE OF CABINETS, WITHOUT TRIM. ACTUAL WORKING DEPTH WILL BE LESS THAN DIMENSION SHOWN UNLESS OTHERWISE SPECIFIED.

Stock/Job#: J3804	Drawing# J3804-104	Cust. App'v/Date# .	Deal'r App'v/Date: .
Osage Dealer: TEN-8 FIRE	Osage Ambulances		
End Customer: CLEARWATER			
NOTICE	Drawn By: S.A.H.	Date: 05-20-25	Scale: NOT TO SCALE
This drawing and/or the information hereon is the exclusive property of Osage Ambulances and shall not be reproduced, used or disclosed without the authorized written consent of Osage Ambulances.	Drawing Description: REARWARD INTERIOR TYPE-I WARRIOR, CREW CAB		Revision# 1

Rev.#	Revision Description	Date	Rev'd	App'vd
3				
2				
1	PRODUCTION DRAFT	05-20-25	SAH	.

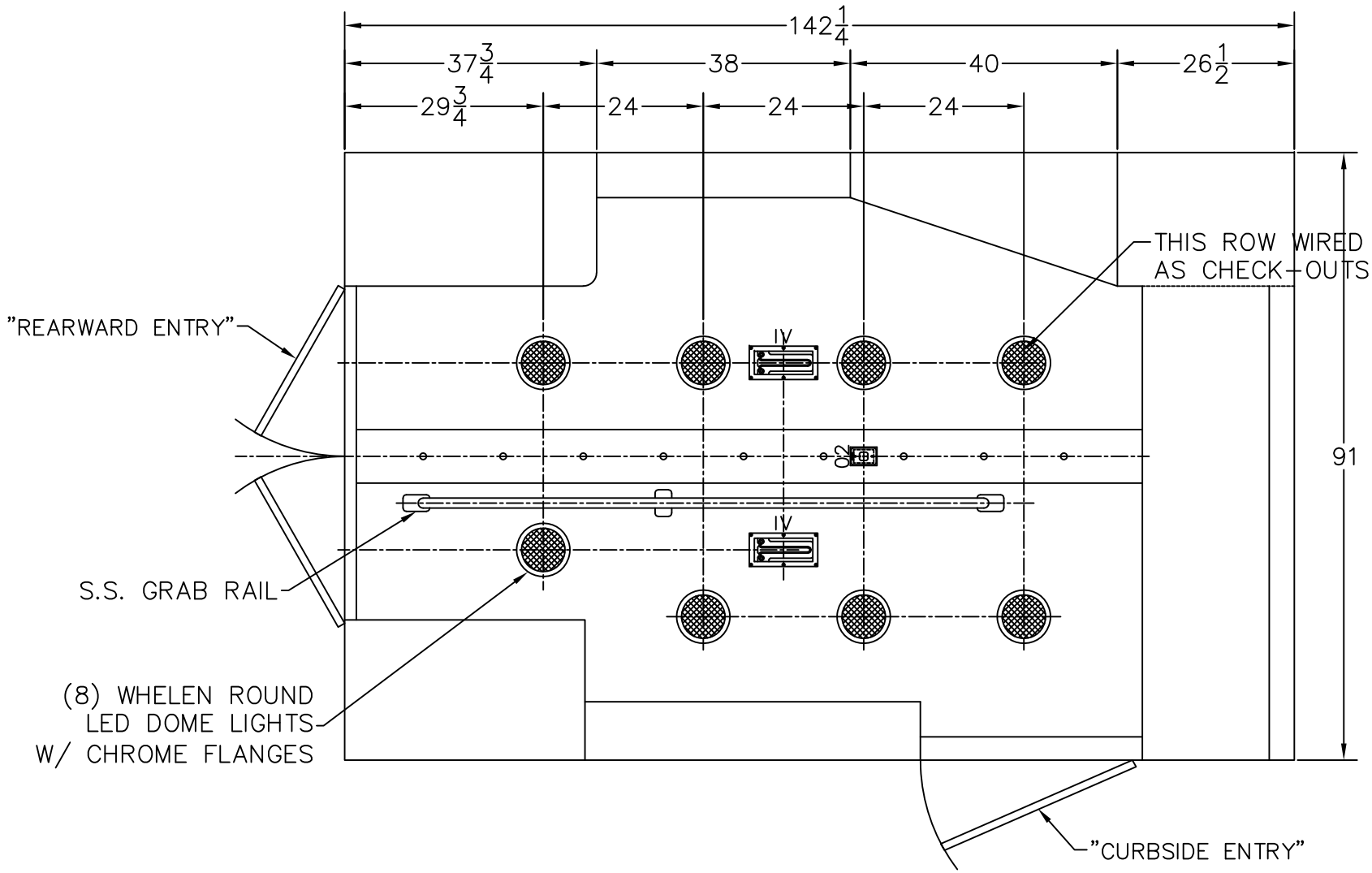

NOTES: THIS DRAWING IS NOT TO SCALE. CHARACTERISTICS AND DIMENSIONS OF FINISHED PRODUCT MAY VARY.

Stock/Job#: J3804	Drawing# J3804-105	Cust. App'v/Date# .	Deal'r App'v/Date: .
Osage Dealer: TEN-8 FIRE	Osage Ambulances		
End Customer: CLEARWATER			
NOTICE	Drawn By: S.A.H.	Date: 05-20-25	Scale: NOT TO SCALE
This drawing and/or the information hereon is the exclusive property of Osage Ambulances and shall not be reproduced, used or disclosed without the authorized written consent of Osage Ambulances.	Drawing Description: CEILING LAYOUT TYPE-I WARRIOR, CREW CAB		Revision# 1

Rev.#	Revision Description	Date	Rev'd	App'vd
3				
2				
1	PRODUCTION DRAFT	05-20-25	SAH	.

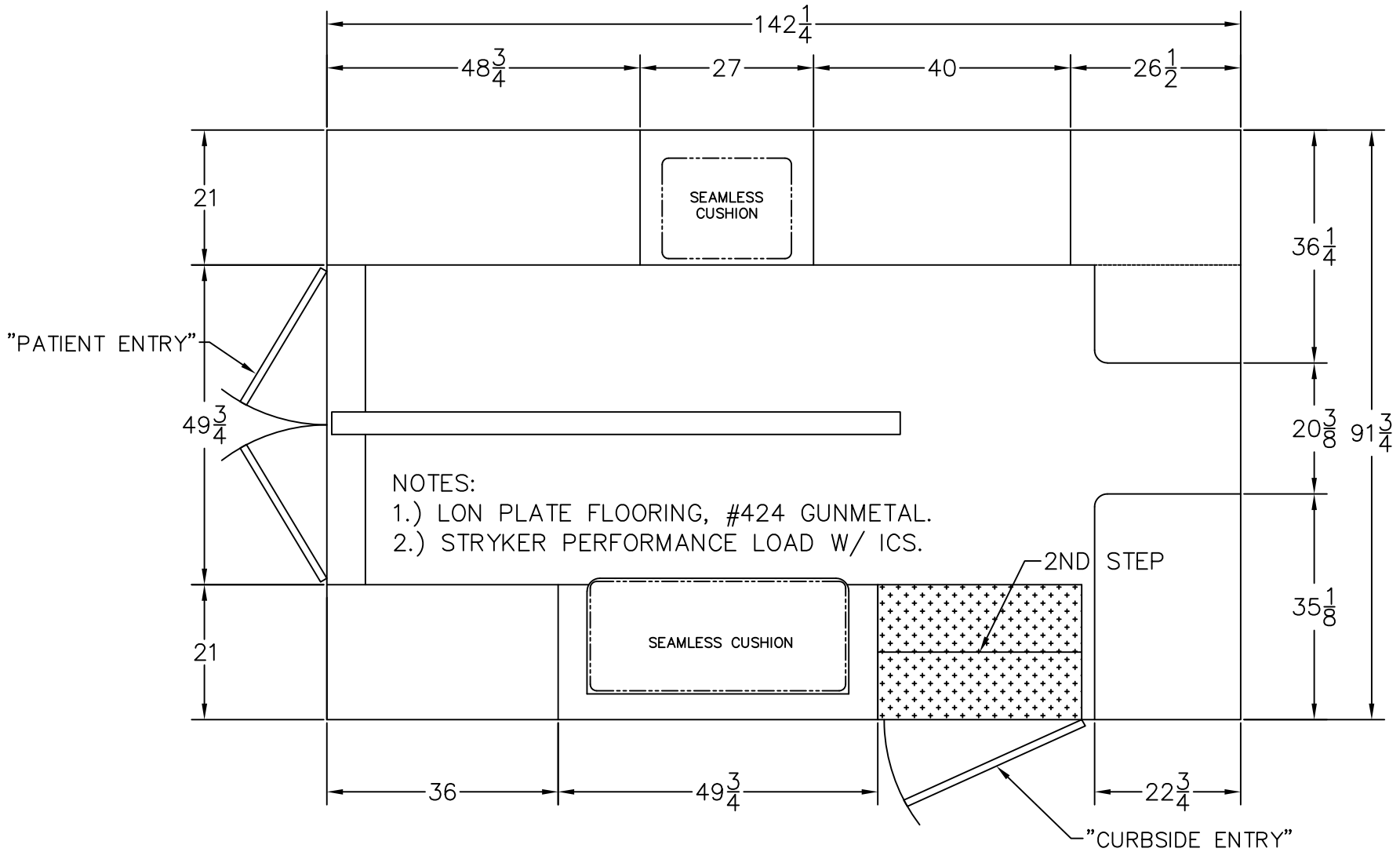

NOTES: THIS DRAWING IS NOT TO SCALE. CHARACTERISTICS AND DIMENSIONS OF FINISHED PRODUCT MAY VARY.

Stock/Job#: J3804	Drawing# J3804-106	Cust. App'v/Date# .	Deal'r App'v/Date: .
Osage Dealer: TEN-8 FIRE	Osage Ambulances		
End Customer: CLEARWATER			
NOTICE	Drawn By: S.A.H.	Date: 05-20-25	Scale: NOT TO SCALE
This drawing and/or the information hereon is the exclusive property of Osage Ambulances and shall not be reproduced, used or disclosed without the authorized written consent of Osage Ambulances.	Drawing Description: FLOOR LAYOUT TYPE-I WARRIOR, CREW CAB		Revision# 1

Rev.#	Revision Description	Date	Rev'd	App'vd
3				
2				
1	PRODUCTION DRAFT	05-20-25	SAH	.